PARTS LIST		
DESCRIPTION	PART NUMBER	QTY
CONTROLLER BOX	CB.D2.CAN	1
LASER RECEIVER	R.ULS.CAN	1
MAST	ME.14.CAN	1
MAST CRADLE (BLACK)	A.ME.14	1
JOYSTICK	A.RS.082 (Optional)	1
HYDRAULIC CABLE	A.RS.080	1
CAN CABLE	A.RS.107	1
CAN CABLE	A.RS.106	1
POWER CABLE	A.RS.001.NC	1
8S-8P ADAPTOR	P.CONN.018 (OPTIONAL)	?
HIRSCHMANN CONNECTORS	GDM 3009 BLACK (Optional)	2

LASER RECEIVER MODELS
R.ULS.CAN
R.ULS.MM.CAN
R.ULS.MM.500
R.ULS.MM.1000

CAN CABLE OPTIONS
A.R.S.111 (2.5m)
A.R.S.110 (5.0m)
A.R.S.107 (10.0m)
A.R.S.106 (CURLY CORD) 1.7m un-streched 8.5m stretched

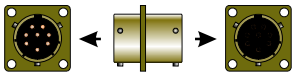

OPTIONAL 8P - 8S
CAN CORD ADAPTOR
(P.CONN.018)
for extending CAN cables

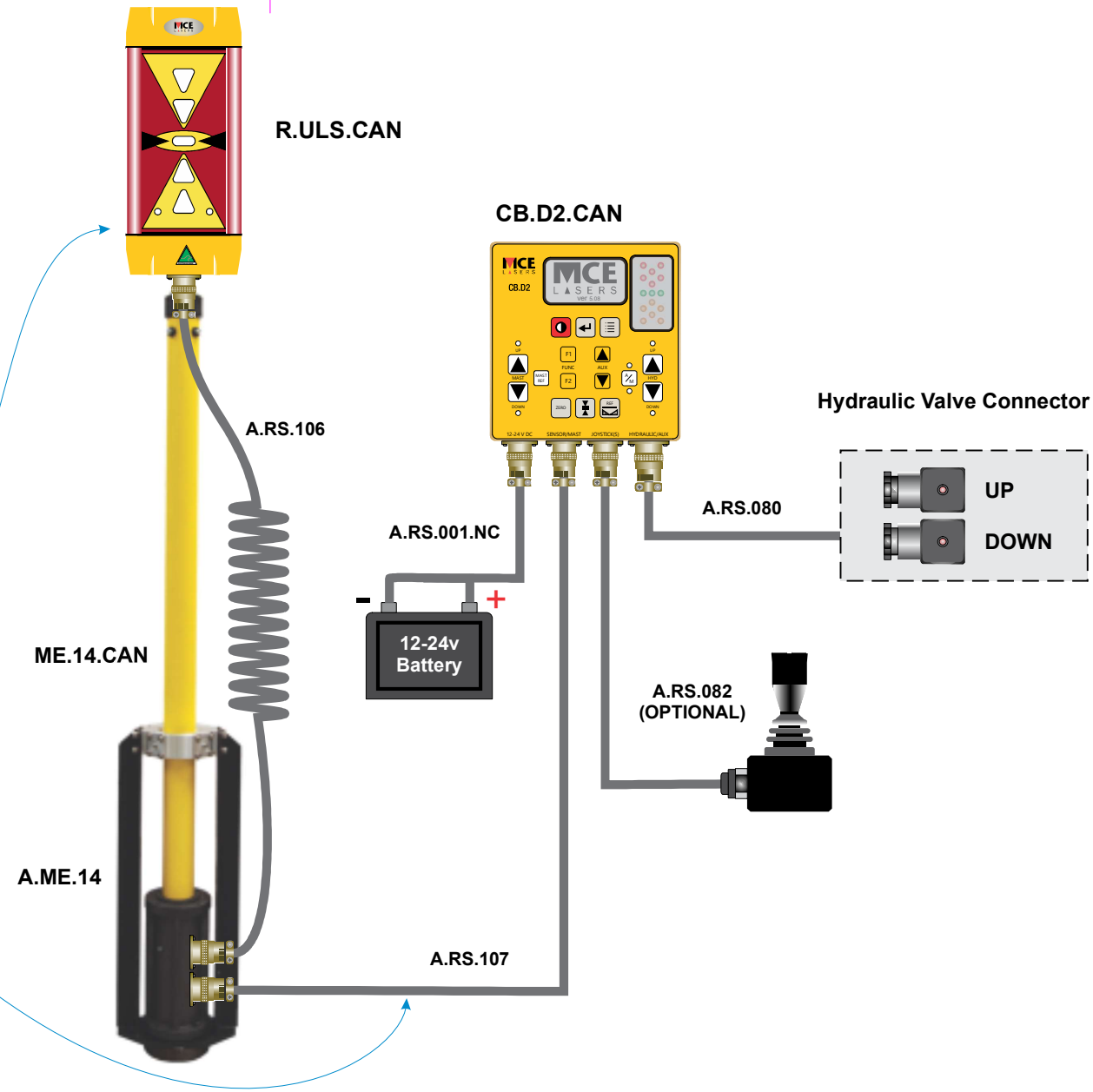

RevNo	Revision note	Date	Signature	Checked
1	Rearranged to be consistent with the rest of the setup diagrams.	03/02/21	N.A.	D.R. & C.R.
	Updated the template.			

Tolerances
Unless Stated:
xx.x = +/- 0.1
xx.xx = +/- 0.05
xx.xxx = +/- 0.02

Path: X:\Graphical Work\Setup Diagrams\Setup diagrams CAN

Material:

Finish:

Drawn by:	Checked by:	Unit:	aumoba Code:	Date:	Scale:
N.A.	D.R.		RS.033	03/02/21	NTS

MOBA MOBILE AUTOMATION AUSTRALIA PTY LTD
90 Willandra Drive,
Epping, Victoria 3076
P: +61 3 9357 0055
Email: aumoba@moba.de
www.moba-automation.com.au

Title: SETUP DIAGRAM FOR CB.D2 WITH R.ULS AND ELECTRIC MAST

Drawing No:

Version:

Sheet: 1