PARTS LIST		
DESCRIPTION	**PART NUMBER**	**QTY**
CONTROLLER BOX	CB.D2.CAN	1
SENSOR OPTION	SENSOR OPTION	1
JOYSTICK	A.RS.082 (Optional)	1
INTERFACE BOX	IB.DUO2.MOB	1
MOBA CAN CABLE	MOB.025	1
CAN CABLE	A.RS.110	1
POWER CABLE	A.RS.001.NC	1
HYDRAULIC CABLE	A.RS.080	1
HYDRAULIC VALVE CONNECTOR	GDM 3009 BLACK (Optional)	2

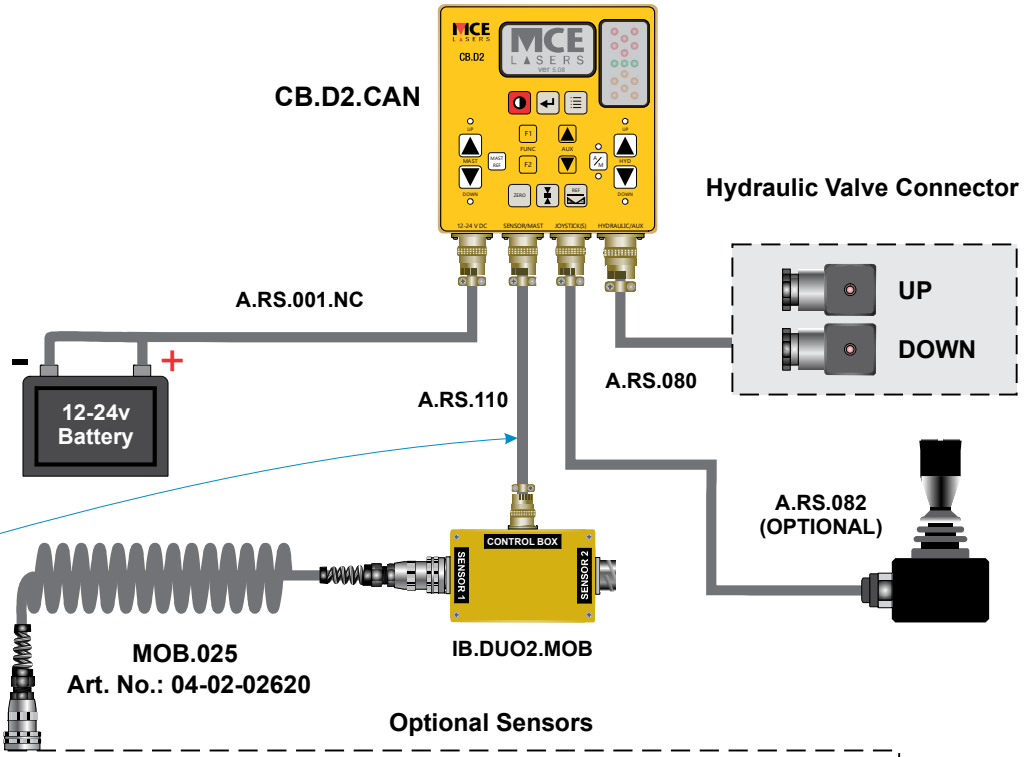

CAN CABLE OPTIONS	
A.R.S.111	(2.5m)
A.R.S.110	(5.0m)
A.R.S.107	(10.0m)
A.R.S.106	(CURLY CORD) 1.7m un-streched 8.5m stretched

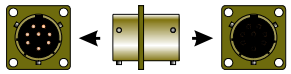

OPTIONAL 8P - 8S
CAN CORD ADAPTOR
(P.CONN.018)
for extending CAN cables

NOTE: Only use the **LEFT SIDE** labelled **'SENSOR 1'** of the interface box (IB.DUO2.MOB).

Optional Sensors

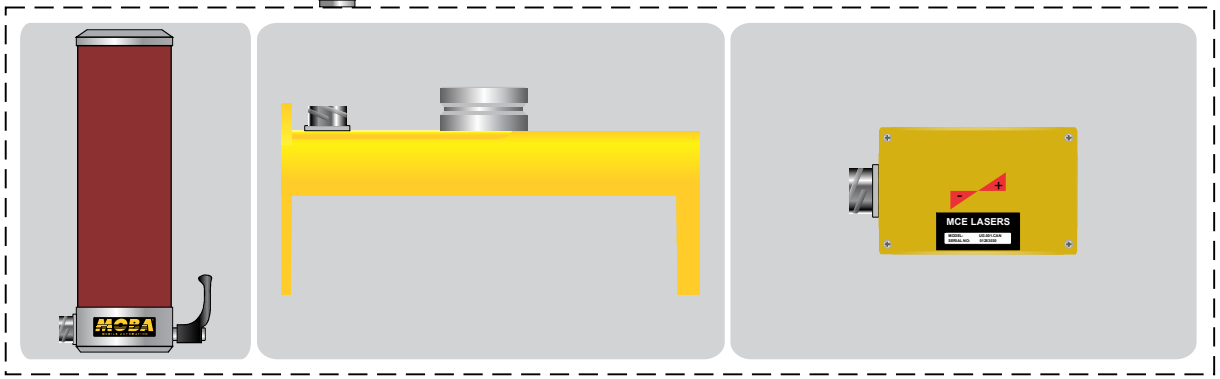

LS-3000 | Sonic Ski | Slope Sensor

RevNo	Revision note	Date	Signature	Checked
1	Rearranged to be consistent with the rest of the setup diagrams.	04/02/21	N.A.	D.R. & C.R.
	Replaced MOBA slope sensor with UG.001.CAN.			
	Updated the template.			

Tolerances
Unless Stated:
xx.x = +/- 0.1
xx.xx = +/- 0.05
xx.xxx = +/- 0.02

Path: X:\Graphical Work\Setup Diagrams\Setup Diagrams Using MOBA Sensors

Material:

Finish:

Drawn by:	Checked by:	Unit:	aumoba Code:	Date:	Scale:
N.A.	D.R.			04/02/21	NTS

MOBA MOBILE AUTOMATION AUSTRALIA PTY LTD
90 Willandra Drive,
Epping, Victoria 3076
P: +61 3 9357 0055
Email: aumoba@moba.de
www.moba-automation.com.au

Title: SETUP DIAGRAM FOR CBD2.CAN MOBA SENSOR OPTION

Drawing No:

Version:

Sheet: 1