PARTS LIST		
DESCRIPTION	**PART NUMBER**	**QTY**
CONTROL PANEL	DUO2.CAN	1
SENSOR OPTION LEFT	SENSOR OPTIONS	1
SENSOR OPTION RIGHT	SENSOR OPTIONS	1
JOYSTICK (OPTIONAL)	JOYSTICK OPTIONS	1
HYDRAULIC CORD	A.RS.080	1
CAN CORD	A.RS.110	3
POWER CORD	A.RS.001.NC	1
DUO2 INTERFACE BOX	IB.DUO2.CAN	1
HIRSCHMANN OR DEUTSCH CONNECTORS (OPTIONAL)	P.CONN.059/043/061	Up to 8

LASER RECEIVER OPTIONS	
R.ULS.CAN	5 CHANNEL RECEIVER
R.ULS.MM.CAN	5 CHANNEL MILLIMETER RECEIVER

CAN CORD OPTIONS	
A.RS.135	1.0m
A.RS.111	2.5m
A.RS.110	5.0m
A.RS.107	10.0m
A.RS.106	Curly Cord, 1.7m un-streched; 8.5m stretched

OPTIONAL 8P-8S ADAPTOR FOR EXTENDING CAN CORDS (P/N: P.CONN.018)

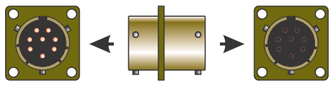

JOYSTICK OPTIONS	
A.RS.082	PROPORTIONAL JOYSTICK, AVAILABLE IN MACHINE-SPECIFIC VARIANTS
A.RS.076	MULTI-STICK FOR DUO2
A.RS.131	JOYSTICK CORD FOR SKID STEER, BARE WIRE

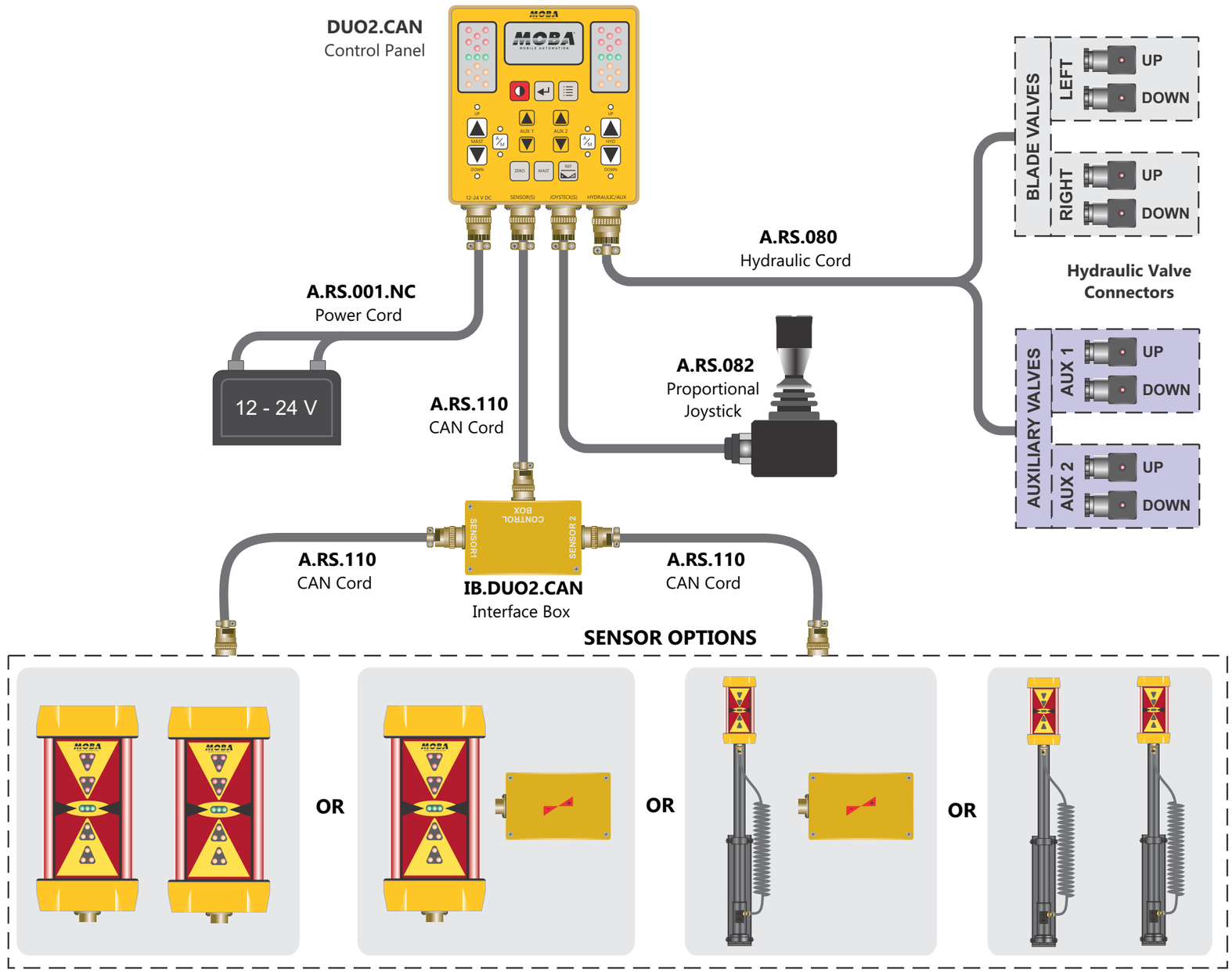

RevNo	Revision note	Date	Signature	Checked
1	Deleted Sonic Sensor and rearranged.	03/02/21	N.A.	D.R. & C.R.
2	Updated the template.			
3	Updated mast, graphics, cable, sensor & joystick options	4/08/25	T.K.	D.R.

Tolerances
Unless Stated:
xx.x = +/- 0.1
xx.xx = +/- 0.05
xx.xxx = +/- 0.02

Path: \1-ADM\Product Documents\Setup Diagrams\Receiving Systems\

Material:
Finish:

Drawn by:	Checked by:	Unit:	aumoba Code:	Date:	Scale:
N.A.	D.R. & C.R.			4/08/25	NTS

MOBA MOBILE AUTOMATION
MOBA Mobile Automation Australia
90 Willandra Drive, Epping
Victoria 3076, Australia
https://moba.com.au

Title: SETUP DIAGRAM FOR DUO2.CAN SENSOR OPTION

Drawing No:
Version: 3
Sheet: 1/1