PARTS LIST		
DESCRIPTION	**PART NUMBER**	**QTY**
CONTROL PANEL	CB.D2.CAN	1
SENSOR OPTION	SENSOR OPTIONS	1
JOYSTICK (OPTIONAL)	JOYSTICK OPTIONS	1
HYDRAULIC CORD	A.RS.080	1
CAN CORD	A.RS.110	1
CAN CORD (MOBA AG)	MOB.025	1
POWER CORD	A.RS.001.NC	1
INTERFACE BOX	IB.DUO2.MOB	1
HIRSCHMANN OR DEUTSCH CONNECTORS (OPTIONAL)	P.CONN.059/043/061	Up to 4

CAN CORD OPTIONS	
A.RS.135	1.0m
A.RS.111	2.5m
A.RS.110	5.0m
A.RS.107	10.0m
A.RS.106	Curly Cord, 1.7m un-streched; 8.5m stretched

OPTIONAL 8P-8S ADAPTOR FOR EXTENDING CAN CORDS (P/N: P.CONN.018)

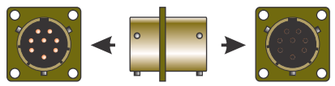

JOYSTICK OPTIONS	
A.RS.082	PROPORTIONAL JOYSTICK, AVAILABLE IN MACHINE-SPECIFIC VARIANTS
A.RS.052	REMOTE CONTROL AUTO/MAN UP/DOWN
A.RS.131	JOYSTICK CORD FOR SKID STEER, BARE WIRE

NOTE: Only use the SENSOR 1 input on IB.DUO2.MOB interface box.

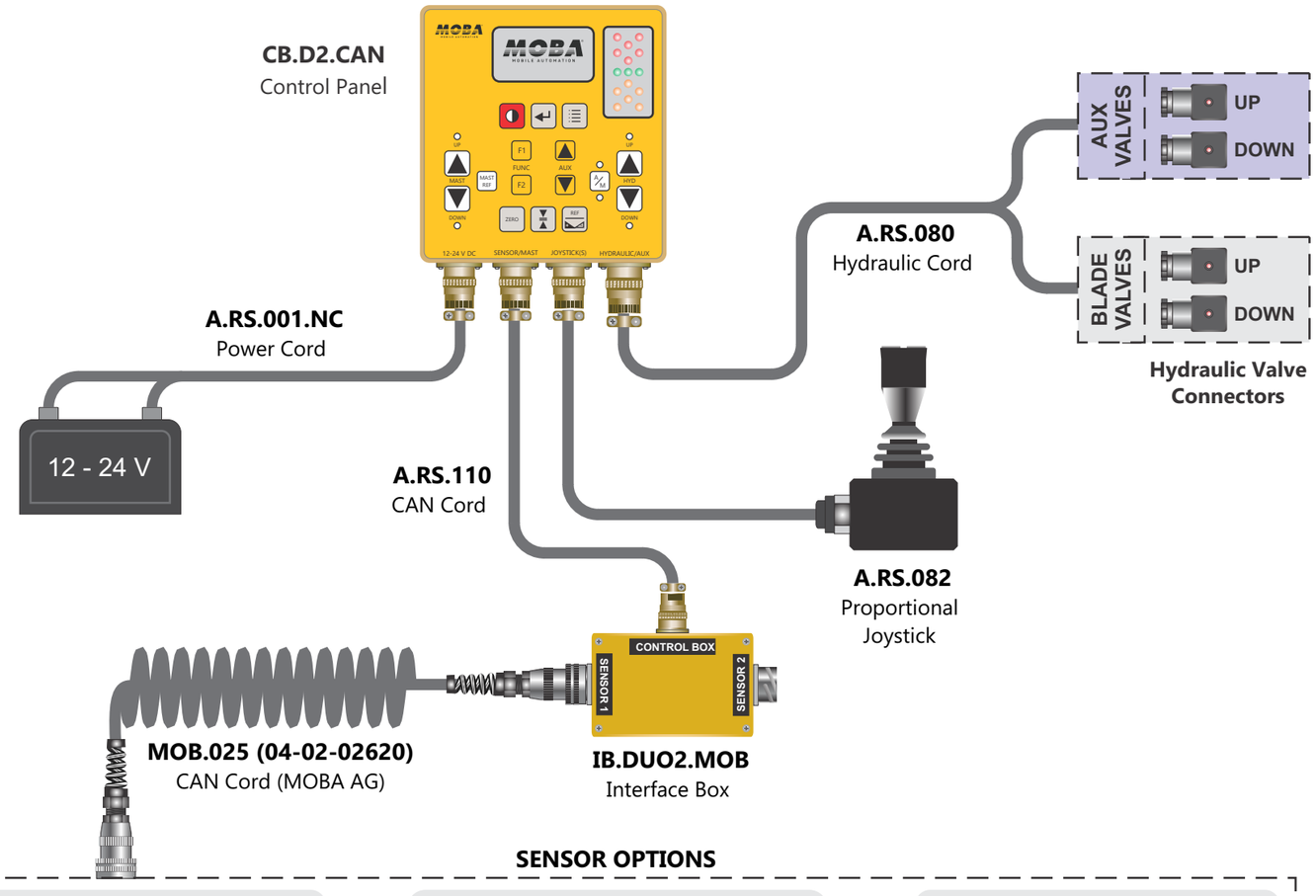

SENSOR OPTIONS

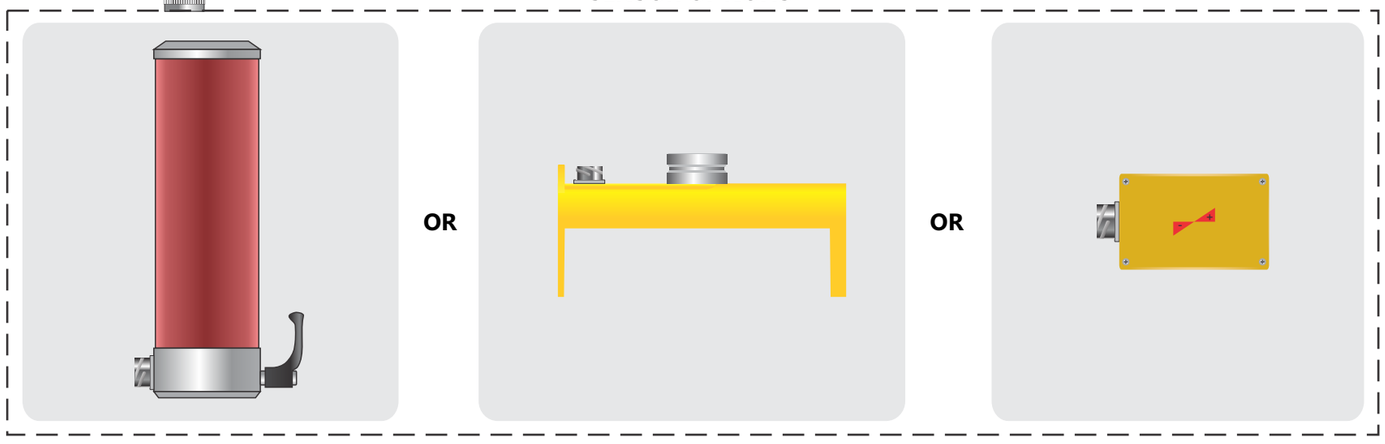

1 x MOB.098 Laser Receiver | **1 x MOB.007 Sonic Sensor** | **1 x UG.001 Slope Sensor**

RevNo	Revision note	Date	Signature	Checked
1	Rearranged to be consistent with the rest of the setup diagrams.	04/02/21	N.A.	D.R. & C.R.
2	Replaced MOBA slope sensor with UG.001.CAN.			
3	Updated the template.			
4	Updated graphics, cord & joystick options, company details.	4/08/25	T.K.	D.R. & C.R.

Tolerances
Unless Stated:
xx.x = +/- 0.1
xx.xx = +/- 0.05
xx.xxx = +/- 0.02

Path: \1-ADM\Product Documents\Setup Diagrams\Receiving Systems\

Material:
Finish:

Drawn by:	Checked by:	Unit:	aumoba Code:	Date:	Scale:
N.A.	D.R.			4/08/25	NTS

MOBA MOBILE AUTOMATION
MOBA Mobile Automation Australia
90 Willandra Drive, Epping
Victoria 3076, Australia
https://moba.com.au

Title: **SETUP DIAGRAM FOR CBD2.CAN MOBA SENSOR OPTION**

Drawing No:
Version: 3
Sheet: 1/1